PC3800

A High-Speed Buck Driver for UV LEDs

PC3800

LED Driver with Average-Mode Constant Current Control

1. General Description

PC3800 is a high-speed buck driver for UV LEDs. It has a 5MHz nominal operational frequency.
The PC3800 includes built-in power switch and diodes with a high-side current sensing circuit. It also has protection circuits and fault report function for short LED, open LED, thermal shutdown and over current condition. The PC3800 are available in a tiny 6TDFN package and 8-SOIC package.

Features

- 12V to 24V Input Voltage Range
- Thermal Shutdown Function
- High-Side Current Sense
- 5MHz Nominal Operation Frequency
- Hysteretic Buck Control
- Up to 7MHz Switching Frequency
- ± 5% UV LED Current Accuracy
- -40 to 125℃ Operating Temperature Range

Application

- General Purpose UV LEDs
- UV LEDs for Air Conditioner, Air Purifier, Refrigerator, Automotives

Typical Application Circuit

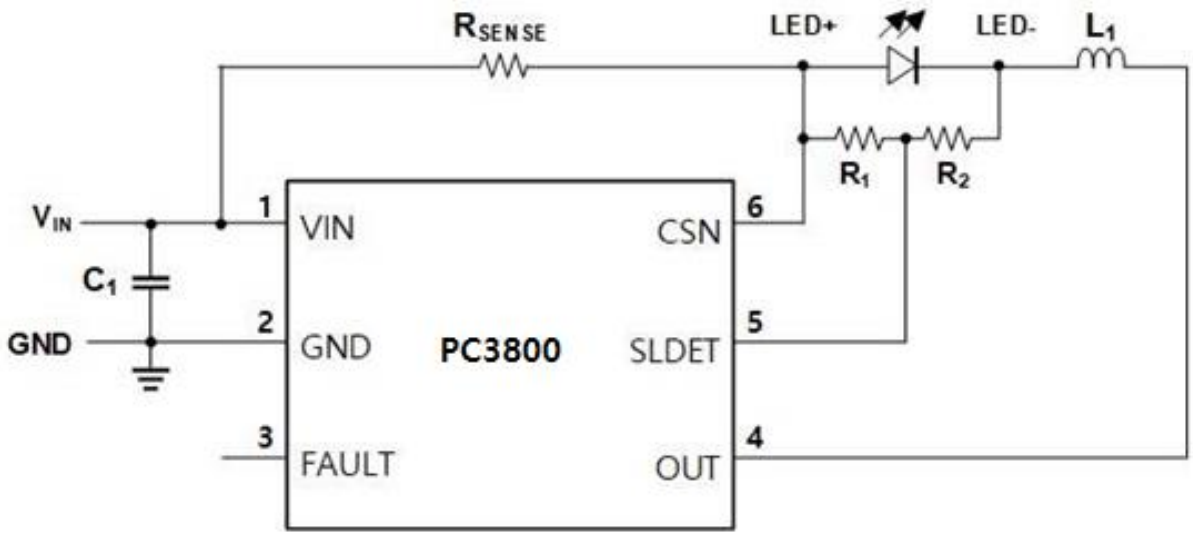

2. Block Diagram

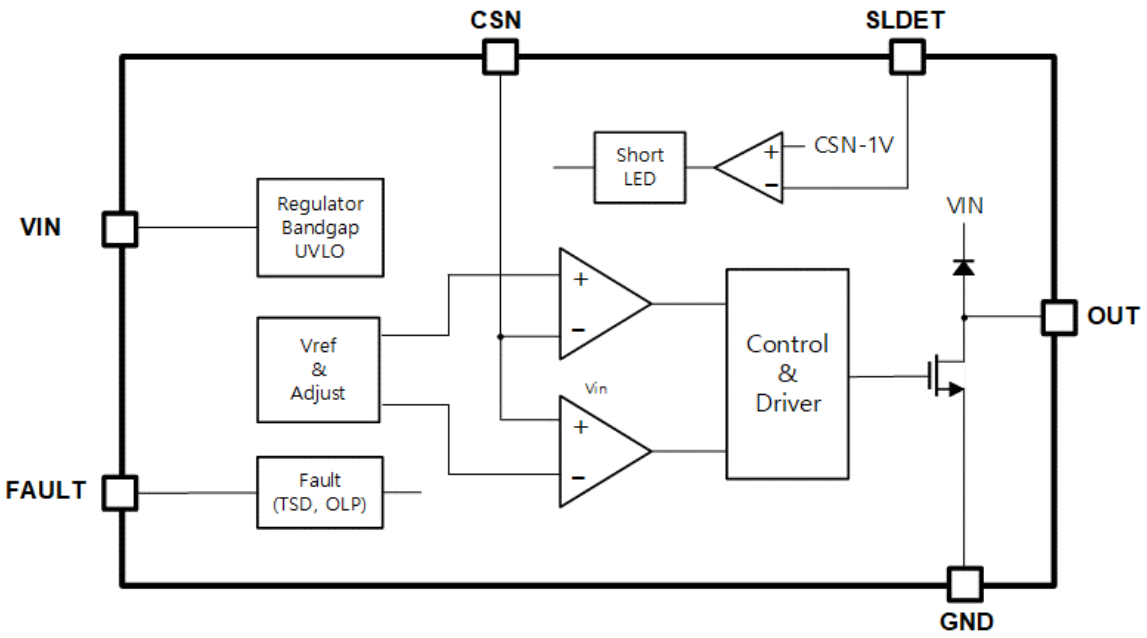

3. Pin Information

- **Pin Placement**

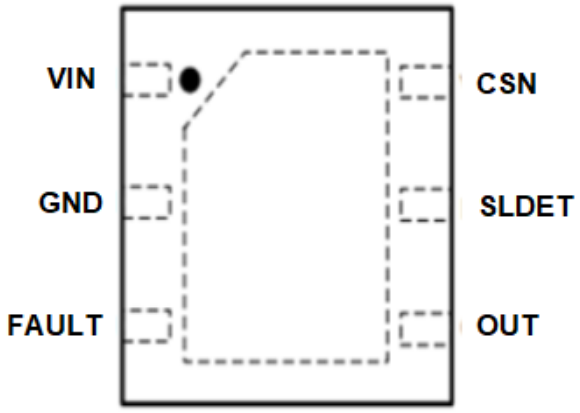

6T DFN

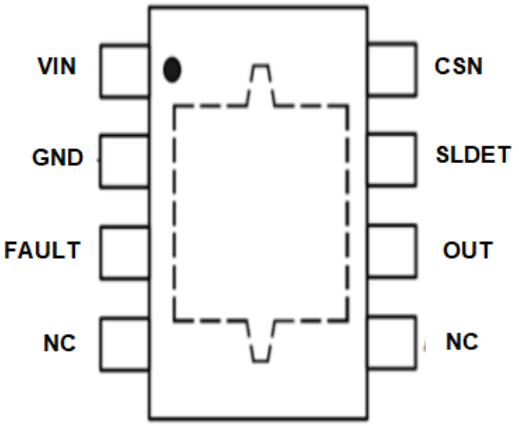

8-SOIC

3. Pin Information

- **Pin Description – 6T DFN**

1	VIN	Input Voltage
2	GND	Ground
3	FAULT	Fault Output for Thermal shutdown and short LED condition
4	OUT	Power MOSFET output
5	SLDET	Short LED detection Input
6	CSN	Current Sense Input

- **Pin Description – 8SOIC**

1	VIN	Input Voltage
2	GND	Ground
3	FAULT	Fault Output for Thermal Shutdown and Short LED Condition
4	NC	No Connection
5	NC	No Connection
6	OUT	Power MOSFET Output
7	SLDET	Short LED Detection Input
8	CSN	Current Sense Input

4. Absolute Maximum Ratings(1)

Symbol	Parameter		Ratings	Unit
V_{IN}, V_{CSN}, V_{DRV}, V_{LEDK}	Input Supply, CSN, OUT, LED_K Voltage		30	V
V_{FAULT}	FAULT Voltage		-0.3 to 6	
V_{CSN_IN}	CSN to Input Supply Voltage		-0.3 to 0.3	
θ_{JA} (2)	Package Thermal Resistance	6T DFN	34.13	℃/W
		8 SOIC	73.84	
T_{JOPR}	Junction Operating Temperature		-40 to 125	℃
T_{STG}	Storage Temperature		-65 to 150	

Note :

(1) Stresses above the max. Values listed here may causse permanent damage to the device. Exposure to absolute maximum rating conditions for extended periods may affect device reliability. Maximum ratings are absolute ratings; exceedingly only one of these values may cause irreversible damage to the integrated circuit.

(2) θ_{JA} is measured in the convection at T_A=30℃ on a high effective thermal conductivity test board (4 Layers, 2S2P) of JEDEC 51-7 thermal measurement standard. PCB dimension is 199 × 100 × 1.6 (㎜) and 4 Layers.

5. Recommended Operating Conditions

Symbol	Parameter	MIN	TYP	MAX	UNIT
IN	Supply Voltage	5.5	12	24	V

6. Electrical Specification

V_{IN}=12V, R_{CSN}=1.33Ω, L=13.3uH typical values are at T_A=+25℃, unless otherwise specified

Characteristics	Symbol	Condition	Min	Typ	Max	Unit
Input Voltage Range	V_{IN}	-	5.5	-	24	V
Under Voltage Lockout	UVLO	IN=CSN, to V_{OUT} < 0.1V	-	5.3	-	
Under Voltage Lockout hysteresis	$UVLO_{HYS}$	IN=CSN, to V_{OUT} > 0.1V	-	0.3	-	
Quiescent Current	I_Q	No Switching Condition	-	-	1	mA
Switching Frequency	f_{SW}	Recommended Switching Frequency	-	5	-	MHz
		Maximum Switching Frequency	7	-	-	
		EMI Modulation Range	0.8×F_{SW}	-	F_{SW}	
		Number of Modulation Step	-	8	-	EA

Current Sense Comparator

Characteristics	Symbol	Condition	Min	Typ	Max	Unit
CSN Threshold Voltage	V_{TH}	Current Sense Threshold Voltage	190	200	210	mV
	V_{HYS}	Hysteresis Voltage	-	150	-	
CSN Input Current	I_{CSN}	V_{IN} - V_{CSN} = 300mV	-	-	10	μA
Propagation Delay to Output High	T_{PH}	VIN-VCSN = 0.3V (Pulse)	-	-	50	ns
Propagation Delay to Output Low	T_{PL}	VIN-VCSN = 0.3V (Pulse)	-	-	50	

Output

Characteristics	Symbol	Condition	Min	Typ	Max	Unit
Turn-On Resistance of Output	$R_{DS,ON}$	Iout = 30mA	-	50	150	mΩ
Maximum Driving Current of Output	$I_{OUT, MAX}$	V_{OUT} = 1V	0.3	-	-	A

6. Electrical Specification

Fault

Characteristics	Symbol	Condition	Min	Typ	Max	Unit
Short LED Detection Voltage	V_{LEDS}	V_{CSN} to V_{OSP} reference Voltage	0.85	1	1.15	V
Short LED Current Shutdown Threshold Voltage	I_{LEDMAX}	ILED Shutdown Threshold	-	$3 \cdot V_{TH}$	-	
Open LED Detection Duty of V_{OUT}	$D_{OPEN, LED}$	Open Duty	-	-	2	%
Fault Report	V_{FAULT}	Output Sinking Current	1	-	-	mA
		Output Voltage Low (I_{OUT}=1mA)	-	-	0.5	V
		Maximum Output Voltage	-	-	6	
Thermal Shutdown	T_D	Threshold Value	-	155	-	℃
		Hysteresis Value	-	30	-	

Note :
(3) Guaranteed by characterization and design

Package Outline – 6TDFN

Package Name	6TDFN
Package Size	3.0 × 3.0 mm, Thickness : 0.75 mm
Pin Pitch	0.95 mm

TOP VIEW

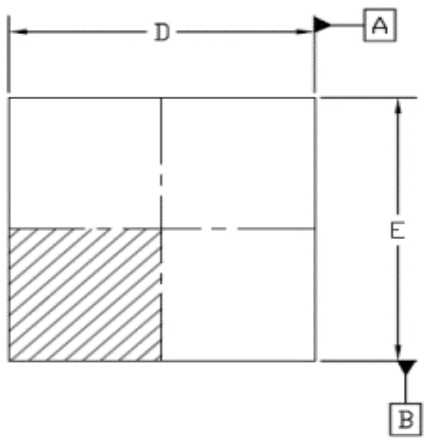

BOTTOM VIEW

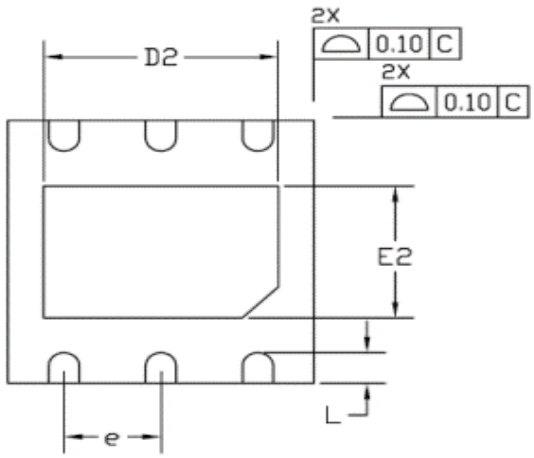

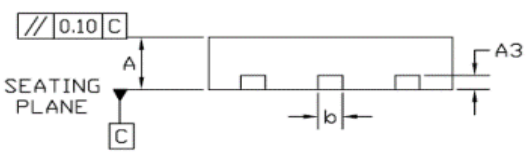

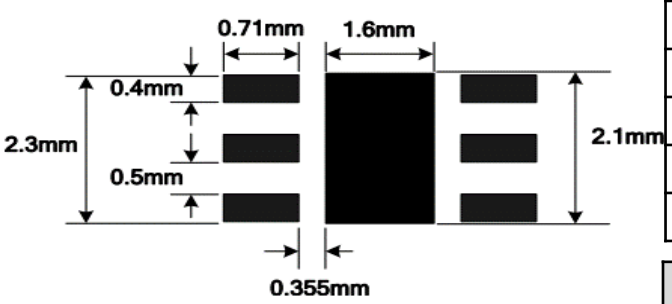

SYMBOL	DIMENSIONS			NOTES
	MIN	NOM	MAX	
A	See Variation 'A'			
A3	0.203 REF			
b	0.25	0.30	0.35	
D	2.90	3.00	3.10	
D2	2.25	2.30	2.35	
E	2.90	3.00	3.10	
E2	1.45	1.50	1.55	
e	0.95 BSC			
L	0.30	0.35	0.40	

SYMBOL	DIMENSIONS			NOTES
	MIN	NOM	MAX	
TDFN	0.70	0.75	0.80	
DFN	0.85	0.90	0.95	

Package Outline – 8SOIC

Package Name	8SOIC
Package Size	6.2 × 5.0 mm, Thickness : 1.52 mm
Pin Pitch	1.27 mm