PC4010

A Constant Output Current LED Driver

5 ~ 40V Supply Voltage, adjustable output current up to 95mA

A Constant LED Current regardless of supply Voltage Variation
with built-in diode for non-polarity

PC4010

LED Driver Provides Constant LED Current Independent of Supply Voltage

1. General Description

The PC4010 is a cost efficient LED driver to drive low power LED's.

The advantages toward resistor solution are :
- Homogenous light output despite varying forward voltage in different LED strips
- Homogenous light output of LEDs despite voltage drop across long supply line
- Homogenous light output independent from supply voltage variations
- Longer lifetime of the LED's due to reduced output current at higher temperature

The advantages towards discrete solutions are :
- Lower assembly cost and smaller from factor
- Better quality due to less soldering points
- Higher output current accuracy due to pretested LED drivers

Features

- LED Drive Current of 69mA
- Supply voltage up to 40V
- Inherent bridge diode for non-polarity
- 1.2V (Typ.) dropout Voltage
- High current accuracy at supply variation
- Reduced output current at higher temperature
- Negative thermal coefficient of -0.08%/℃
- No EMI
- ESD protection

Application

- Channel letters for advertising, LED strips for decorative lighting
- LED strips for interior decorative of automotive
- Retrofits for general lighting, white goods like refrigerator lighting
- Medical lighting and power supply any resistive or LED

2. Typical Application Circuit

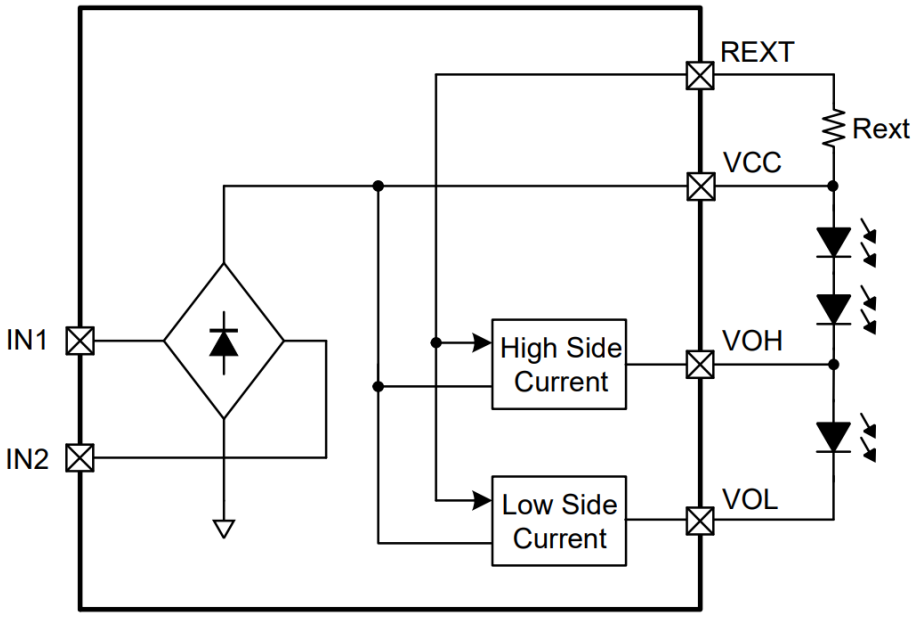

3. Pin Information

- **Pin Placement – Bare die**

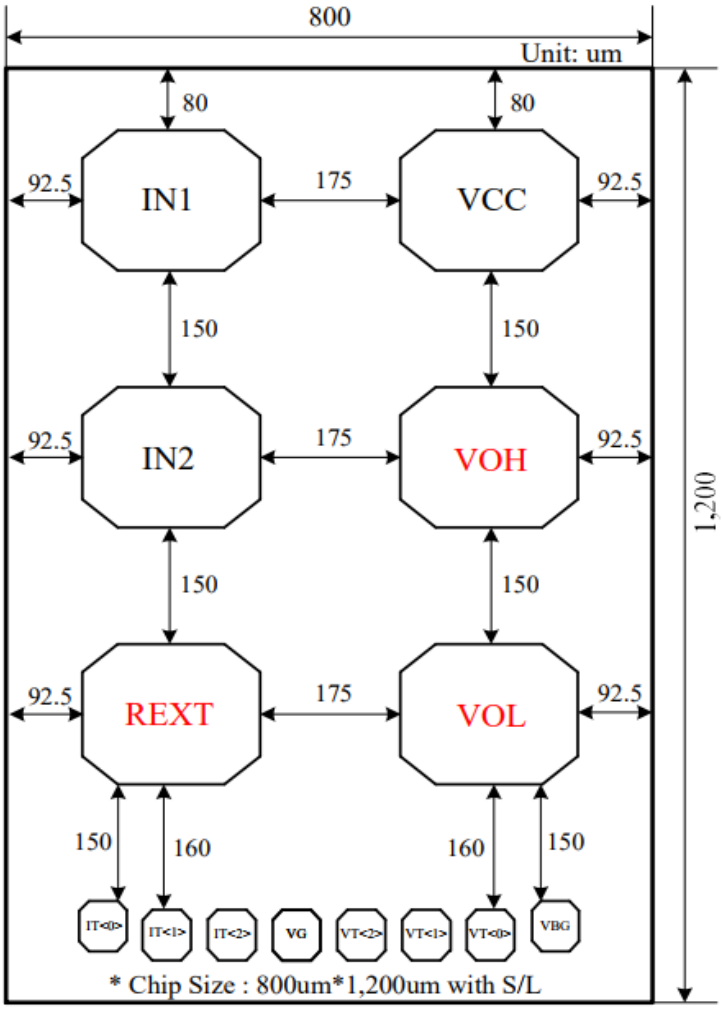

Note :

Bonding PAD : 220 × 180 um
Test/Trim PAD : 60 × 65 um (PAD pitch : 80um)

- **Pin Description**

NO	NAME	Description
1	IN1	Input Power Supply 1
2	IN2	Input Power Supply 2
3	REXT	External Resistor for Increasing Output Current
4	VOL	Low Side Output
5	VOH	High Side Output
6	VCC	Internal Power Supply Pin

3. Pin Information

- **Pin Placement – DFN 8L**

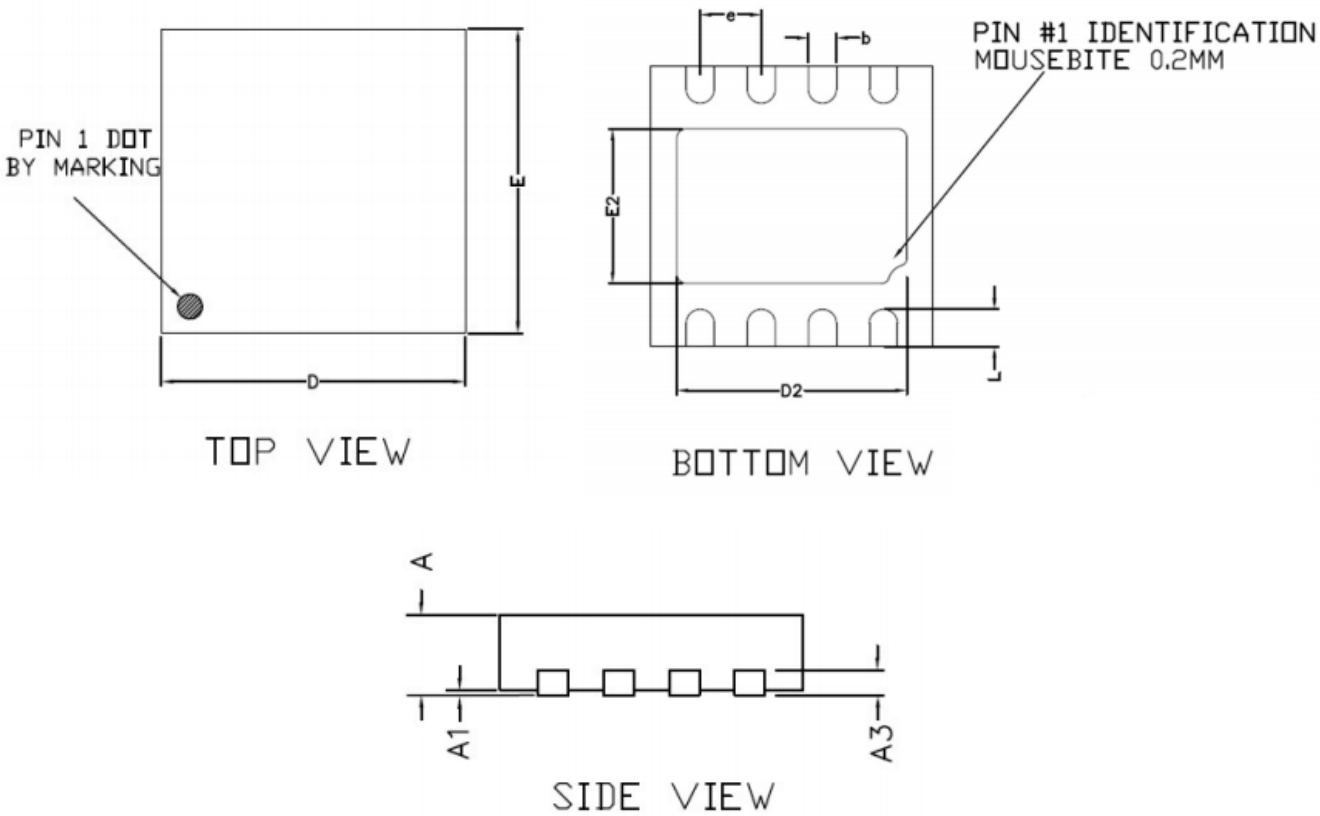

- **Pin Description**

NO	NAME	Description
1	IN1	Input Power Supply 1
2	IN2	Input Power Supply 2
3	REXT	External Resistor for Increasing Output Current
4	GND	Ground
5	N.C	Not Connected
6	VOL	Low Side Output
7	VOH	High Side Output
8	VCC	Internal Power Supply Pin

4. Absolute Maximum Ratings

Symbol	Description	Ratings	Unit
V_{CC}	Supply Voltage	40	V
T_J	Operating Junction Temperature	150	℃
T_A	Operating Ambient Temperature Range	-20 to 85	℃
T_{STG}	Storage Temperature Range	-55 to 150	℃

5-1. Electrical Specification

Input Differential Voltage (V_{IN})=12V, T_A=+25℃, unless otherwise specified

Description	Symbol	Condition	Min	Typ	Max	Unit
Breakdown Voltage	$V_{BR(CEO)}$	No Load	40	-	-	V
Start-up Current	I_{ST}	V_{IN}=3V	20	28	36	mA
Supply Current	I_{CC}	V_{IN}=12V	200	400	800	μA
Output Current	I_{OUT}	V_{CC}=12V, V_{OUT}=7.5V	62	69	76	mA
Output Current	I_{OUT}H	V_{IN}=25V, V_{OUT}=7.5V	I_{OUT}×0.8	I_{OUT}×0.9	I_{OUT}×0.95	mA
Rext Voltage Drop	V_{DROP}	I_{OUT}=90%, Ta=25℃	0.9	1.2	1.5	V
OVP Trigger Voltage	VOVP	Vin=L→H	30	32.2	35	V
OVP Hysteresis	VHYS		0.6	1.2	2	V

DC Characteristics with stabilized LED load

Description	Symbol	Condition	Min	Typ	Max	Unit
Output Current on Pin OUT change vs. Ta	ΔI_{OUT}/Ta	V_{IN}=12V, V_{OUT}=7.5V, Ta=-20 to 100℃	-	-0.08	-	%/℃
Output Current on Pin OUT change vs. V_{IN}	$\Delta I_{OUT}/V_{IN}$	V_{IN}=12~16V	-	0.001	-	%/V

Package Outline

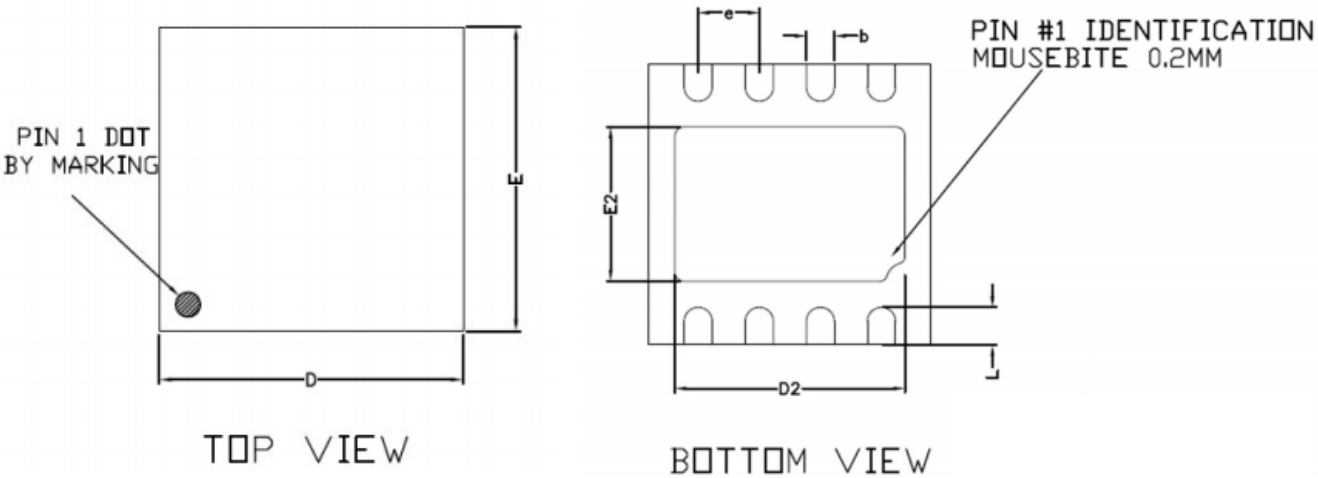

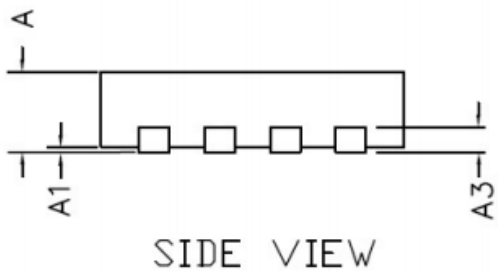

Unit : mm

SYMBOL	DIMENSIONS		
	MIN	NOM	MAX
A	0.70	0.75	0.80
A1	0.00	-	0.05
A3	-	0.2	-
D	2.95	3.00	3.05
E	2.95	3.00	3.05
b	0.25	0.30	0.35
L	0.30	0.40	0.50
D2	2.35	2.45	2.55
E2	1.55	1.65	1.75
e	-	0.65	-