PM001N040GM

40V 100A 1.0mΩ Si Single N-channel Trench MOSFET with Normal Diode

PowerCubeSemi, Inc.
Potential · Convergence · Smart

Features

Si Single N-channel Trench MOSFET

- Rated to 40V at 100Amps @T_J = 25℃
- Max $R_{DS(on)}$ = 1.0 mΩ
- Typ $R_{DS(on)}$ = 0.8 mΩ
- Gate Charge(Typ. Q_g=103.5 nC)
- 100% UIL Tested
- 100% Rg Tested

Application

- Server
- General Purpose

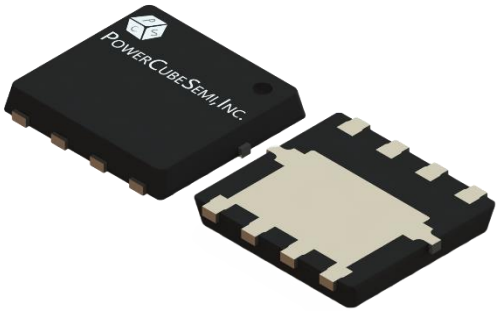

PKG type : PDFN56

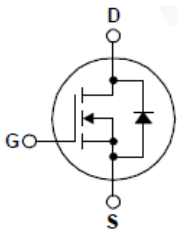

Halogen-Free

RoHS

Description

PM001N040GM uses advanced PowerCubeSemi's MOSFET Technology, which provides high performance in on-state resistance, fast switching performance and excellent quality. PM001N040GM is suitable device for Synchronous Rectification for Server and general purpose applications.

Absolute Maximum Ratings

Symbol	Parameter	Test Condition	Value	Unit
BV_{DSS}	Drain-Source Breakdown Voltage	V_{GS}=0V, I_D=250μA	40	V
I_D	Drain Current	T_c=25℃	100	A
I_{DM}	Pulsed Drain Current	Pulse width limited by junction temperature	400	A
V_{GS}	Gate-Source Voltage		±20	V
E_{AS}	Single Pulsed Avalanche Energy	I_{AS}=30A, V_{GS}=10V, L=1.0mH, T_J=25℃	450	mJ
P_d	Power Dissipation	T_C=25℃	96.2	W
T_j	Operating Junction Temperature		150	℃
T_{stg}	Storage Temperature		-55 to 150	℃

Package Marking and Ordering Information

Device Marking	Device	Package	Packing Method	Tape width	Quantity
PM001N040GM	PM001N040	PDFN56	Tape & Reel	-	-

Electrical Characteristics of Si MOSFET

Symbol	Parameter	Test Condition	Numerical			Unit
			Min	Typ.	Max.	
BV_{DSS}	Drain-Source Breakdown Voltage	V_{GS} = 0V, I_D = 250μA, T_J = 25°C	40	-	-	V
I_{DSS}	Zero Gate Voltage Drain Current	V_{DS} = 32V, V_{GS} = 0V	-	-	1	μA
I_{GSS}	Gate-Source Leakage Current	V_{GS} = ±20V, V_{DS} = 0V	-	-	±0.1	μA
$V_{GS(th)}$	Gate Threshold Voltage	V_{DS} =V_{GS}, I_D =250μA	1.0	-	2.0	V
$R_{DS(ON)}$	Static Drain-Source On State Resistance	V_{GS} = 10V, I_D = 50A	-	0.8	1.0	mΩ
g_{FS}	Forward Transconductance	V_{GS} = 10V, I_D = 50A	-	185	-	S
$t_{d(on)}$	Turn-on Delay time	V_{DS} = 20V, I_D = 50A, V_{GS} = 10V, R_G = 3.0Ω	-	21.8	-	ns
T_r	Turn-on Rise time		-	18.8	-	
$t_{d(off)}$	Turn-off Delay time		-	96.3	-	
T_f	Turn-off Fall time		-	44.1	-	

Electrical Characteristics of Si MOSFET

Symbol	Parameter	Test Condition	Numerical		Unit
			Typ.	Max.	
$R_{\theta JC}$	Thermal resistance, Junction to case		1.3	-	℃/W
R_g	Gate resistance	V_{GS} = 0V, f = 1.0㎒	1.0	-	Ω
C_{iss}	Input capacitance	V_{DS} = 20V, V_{GS} = 0V, f = 1.0㎒	6,892.7	-	pF
C_{oss}	Output capacitance		2,058.7	-	
C_{rss}	Reverse transfer capacitance		147.2	-	
$Q_{g(tot)}$	Total gate charge at 10V	V_{DS} = 20V, I_D = 50A $V_{GS(on)}$ = 10V	103.5	-	nC
Q_{gs}	Gate to source gate charge		18.5	-	
Q_{gd}	Gate to drain "Miller" charge		13.7	-	

Electrical Characteristics of Si Diode

Symbol	Parameter	Test Condition	Numerical		Unit
			Typ.	Max.	
I_S	Maximum continuous drain to source diode forward current		-	100	A
I_{SM}	Maximum pulsed drain to source diode forward current		-	400	A
V_{SD}	Drain to source diode forward voltage	I_S = 50A, V_{GS} = 0V	0.8	1.2	V
T_{rr}	Reverse recovery time	I_F = 50A, di/dt=100 A/us	57.7		ns
Q_{rr}	Reverse recovery charge		105.4		nC

Typical Characteristics

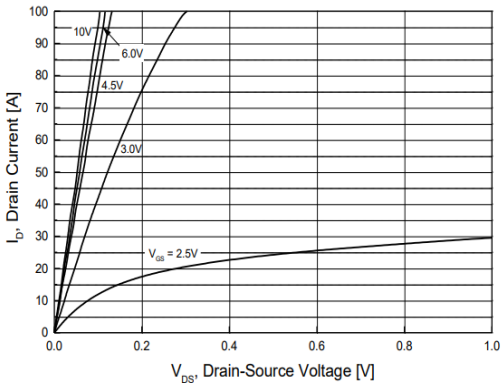

Figure 1. On-Region Characteristics

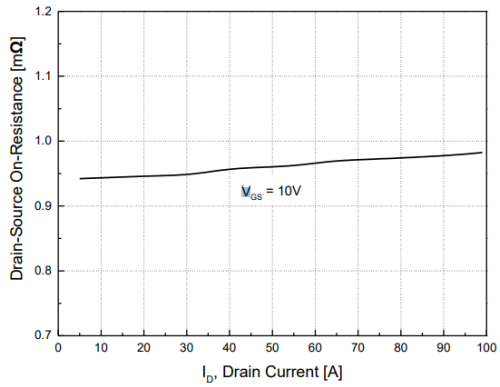

Figure 2. On-Resistance Variation with Drain Current and Gate Voltage

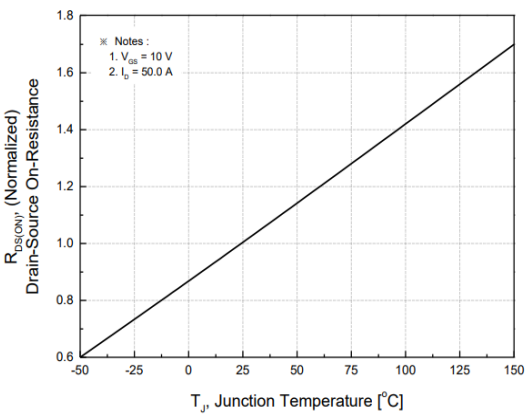

Figure 3. On Resistance Variation with Temperature

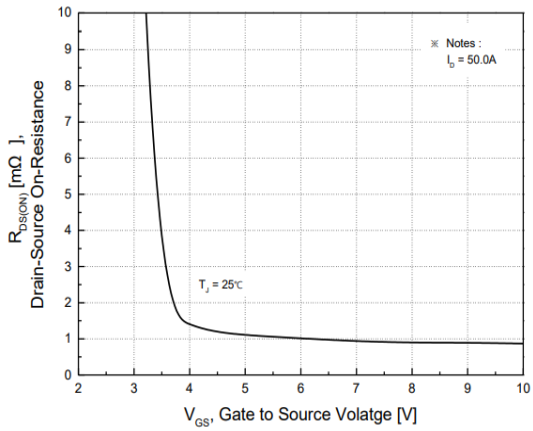

Figure 4. On-Resistance Variation With Gate to Source Voltage

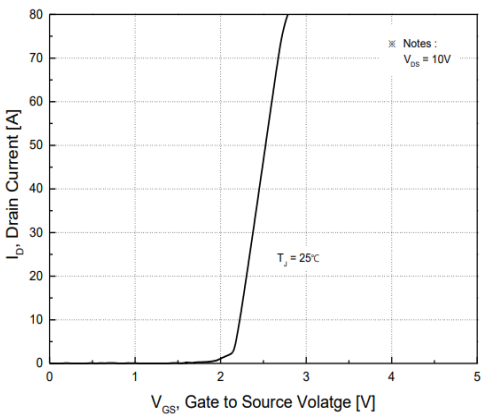

Figure 5. Transfer Characteristics

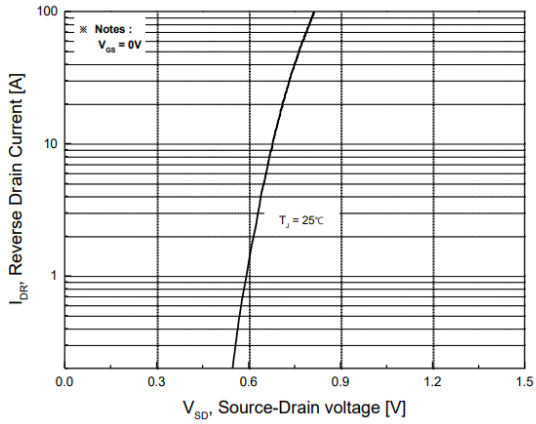

Figure 6. Body Diode Forward Voltage Variation with Source Current and Temperature

Typical Characteristics

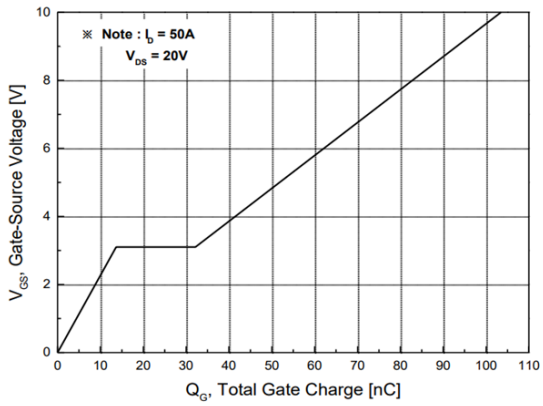

Figure 7. Gate Charge

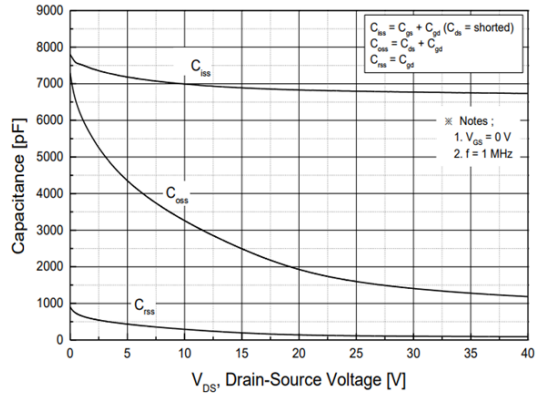

Figure 8. Capacitance

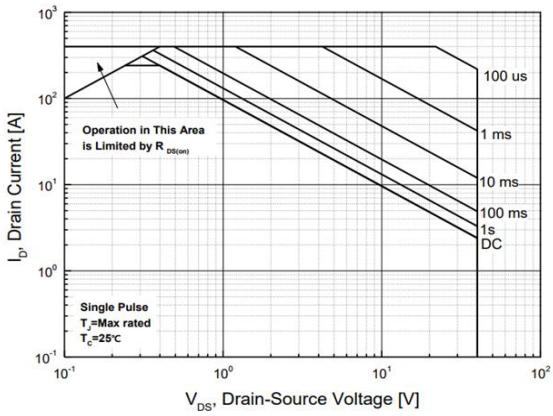

Figure 9. Maximum Safe Operating Area

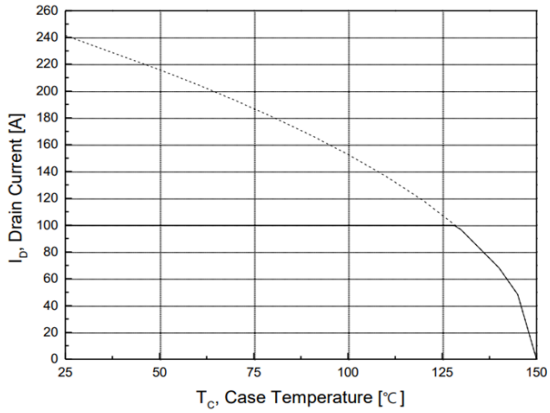

Figure 10. Maximum Drain Current vs. Case Temperature

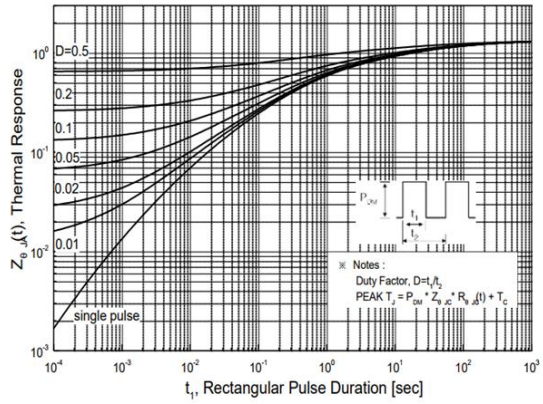

Figure 11. Transient Thermal Response Curve

Package Outline

Unit : mm

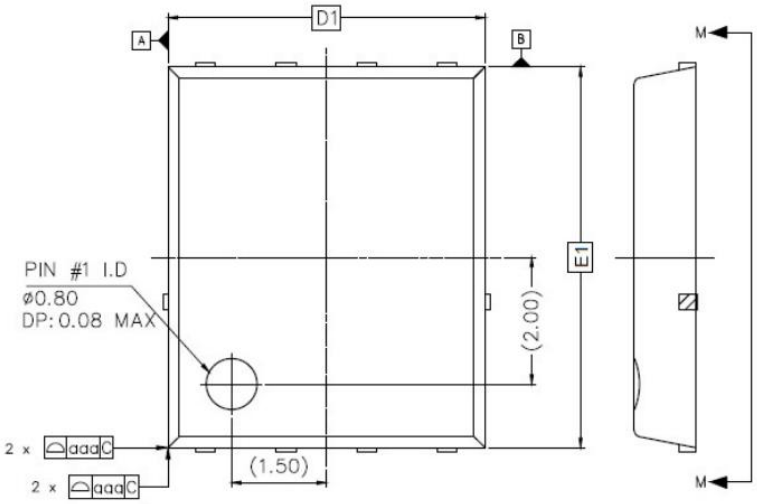

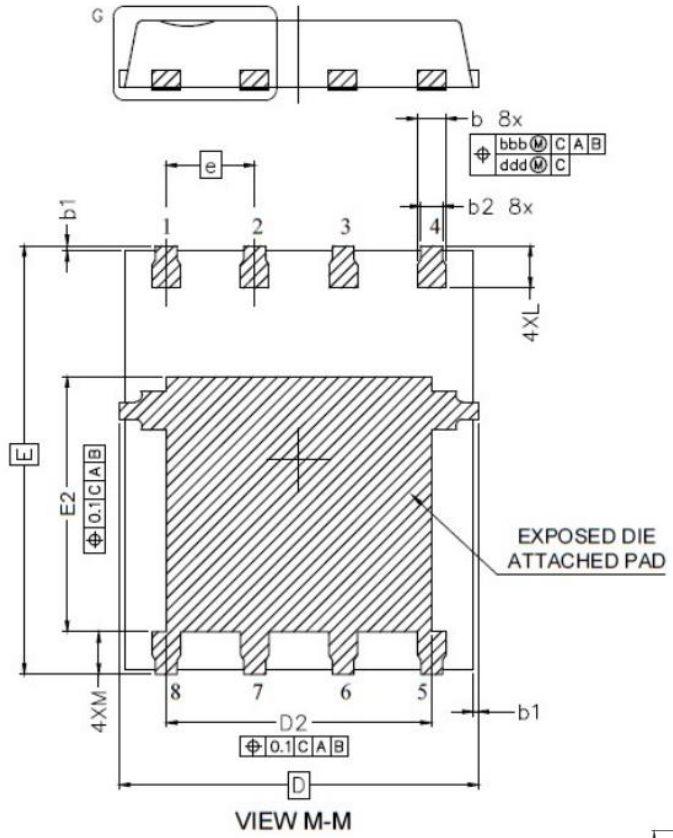

SYMBOL	DIMENSION		NOTES
	MIN	MAX	
A	0.95	1.05	
A1	0.00	0.05	
A3	0.254 REF		
b	0.31	0.51	
b1	0.03	0.13	
b2	0.21	0.41	
D	5.15 BSC		
D1	5.00 BSC		
D2	3.70	3.90	
E	6.15 BSC		
E1	6.00 BSC		
E2	3.56	3.76	
e	1.27 BSC		
L	0.51	0.71	
M	0.51	0.71	
P	**10°**	**12°**	
aaa	0.10		
bbb	0.10		
ccc	0.10		
ddd	0.05		
eee	0.08