PM170N200CR

PowerCubeSemi, Inc.
Potential · Convergence · Smart

200V 18A 170mΩ N-channel Enhancement mode MOSFET with Normal Diode

Features

Si N channel Enhancement mode MOSFET

- Rated to 200V at 18Amps @T_J = 25℃
- Max $R_{DS(on)}$ = 170 mΩ
- Gate Charge(Typ. Q_g=45 nC)
- Super low gate charge
- Green device available
- Advanced high cell density trench technology

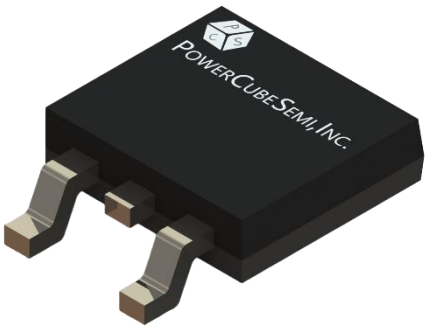

PKG type : TO-252(DPAK)

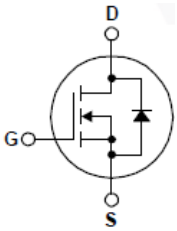

Halogen-Free

RoHS

Absolute Maximum Ratings

Symbol	Parameter	Test Condition	Value	Unit
BV_{DSS}	Drain-Source Breakdown Voltage	V_{GS}=0V, I_D=250μA	200	V
I_D	Drain Current	T_c=25℃	18	A
I_{DM}	Pulsed Drain Current	Pulse width limited by junction temperature	40	A
V_{GS}	Gate-Source Voltage		±20	V
E_{AS}	Single Pulsed Avalanche Energy	V_{GS}=10Ω, V_{DD}=25V, L=0.1mH	15	mJ
P_d	Power Dissipation	T_C=25℃	34	W
T_j	Operating Junction Temperature		150	℃
T_{stg}	Storage Temperature		-55 to 150	℃

Package Marking and Ordering Information

Device Marking	Device	Package	Packing Method	Tape width	Quantity
PM170N200CR	PM170N200	TO-252	Tube & Reel	-	-

Electrical Characteristics of Si MOSFET

Symbol	Parameter	Test Condition	Numerical			Unit
			Min	Typ.	Max.	
BV_{DSS}	Drain-Source Breakdown Voltage	V_{GS} = 0V, I_D = 250μA, T_J = 25°C	200	-	-	V
I_{DSS}	Zero Gate Voltage Drain Current	V_{DS} = 200V, V_{GS} = 0V T_C = 25°C	-	-	1	μA
I_{GSS}	Gate-Source Leakage Current	V_{GS} = ±20V, V_{DS} = 0V	-	-	±100	nA
$V_{GS(th)}$	Gate Threshold Voltage	V_{DS} =V_{GS}, I_D = 250μA	1.2	-	2.5	V
$R_{DS(ON)}$	Static Drain-Source on state resistance	V_{GS} = 10V, I_D = 8A	-	-	170	mΩ
$t_{d(on)}$	Turn-on Delay time	V_{DD} = 100 V, I_D = 9A, V_{GS} = 10 V, R_G = 3Ω	-	13	-	ns
T_r	Turn-on Rise time		-	8.2	-	
$t_{d(off)}$	Turn-off Delay time		-	25	-	
T_f	Turn-off Fall time		-	11	-	

Electrical Characteristics of Si MOSFET

Symbol	Parameter	Test Condition	Numerical		Unit
			Typ.	Max.	
$R_{\theta JC}$	Thermal Resistance, Junction to Case		3.7	-	℃/W
C_{iss}	Input Capacitance	V_{DS} = 25V, V_{GS} = 0V, f = 1.0㎒	2047	-	pF
C_{oss}	Output Capacitance		109	-	
C_{rss}	Reverse Transfer Capacitance		70	-	
$Q_{g(tot)}$	Total Gate Charge at 10V	V_{DD} = 80V, I_D = 9A $V_{GS(on)}$ = 10V	45	-	nC
Q_{gs}	Gate to Source Gate Charge		9	-	
Q_{gd}	Gate to Drain "Miller" Charge		10.5	-	

Electrical Characteristics of Si Diode

Symbol	Parameter	Test Condition	Numerical		Unit
			Typ.	Max.	
I_S	Maximum continuous drain to source diode forward current		-	18	A
I_{SM}	Maximum pulsed drain to source diode forward current		-	40	A
V_{SD}	Drain to source diode forward voltage	I_{SD} = 9A, V_{GS} = 0V	-	1.2	V
T_{rr}	Reverse recovery time	I_F = 9A, V_{GS} = 0V, dI_F/dt=100A/㎲	37	-	ns
Q_{rr}	Reverse recovery charge		103	-	nC

Typical Characteristics

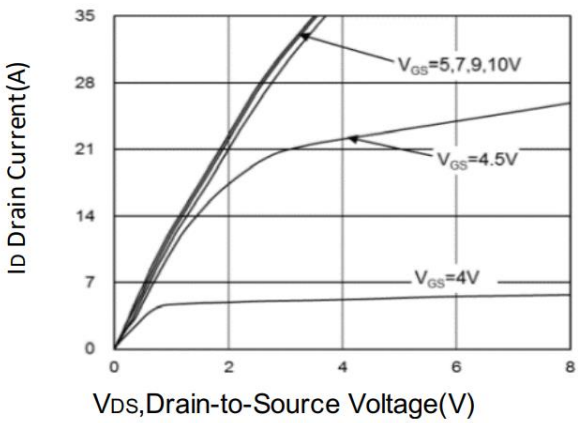

Figure 1. On-Region Characteristics

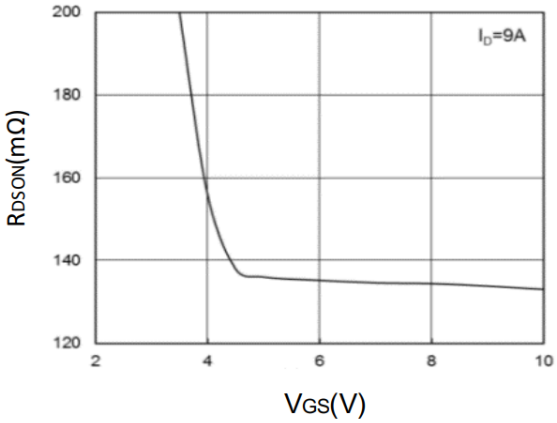

Figure 2. On-Resistance vs. Gate to Source Voltage

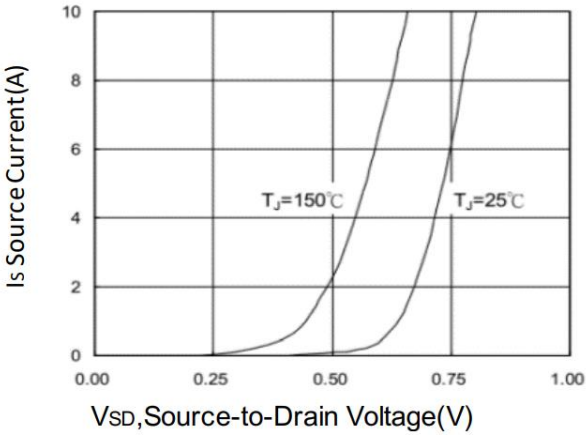

Figure 3. Forward Characteristics of Reverse diode

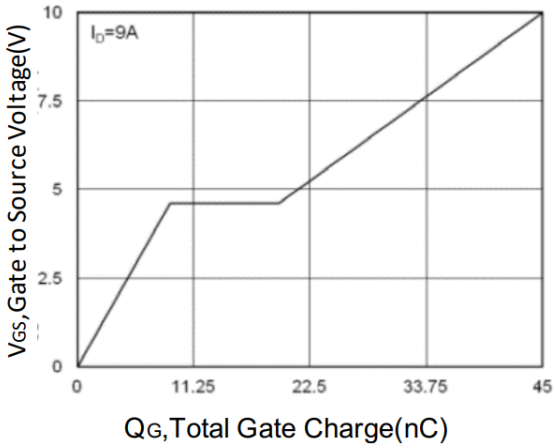

Figure 4. Gate Charge Characteristics

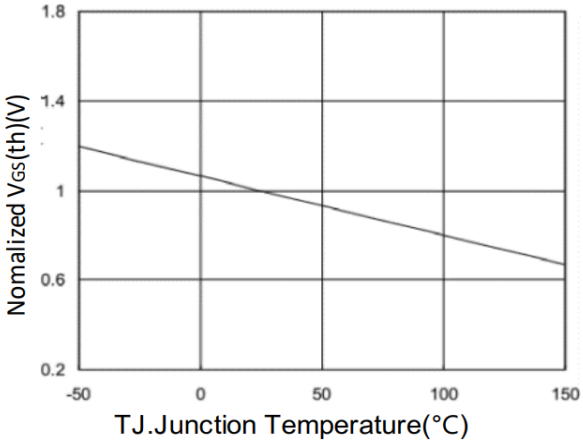

Figure 5. Normalized Threshold Voltage vs. Junction Temperature

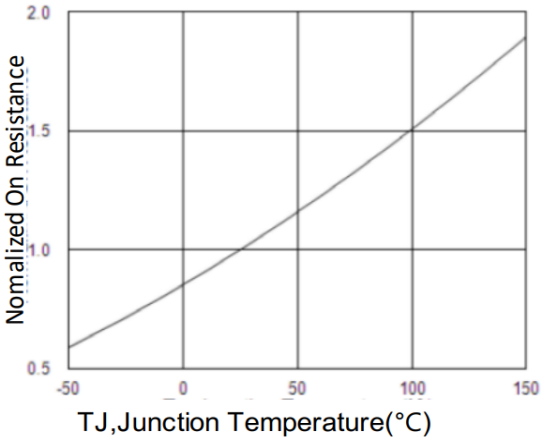

Figure 6. Normalized Drain to Source on resistance vs. Junction Temperature

Typical Characteristics

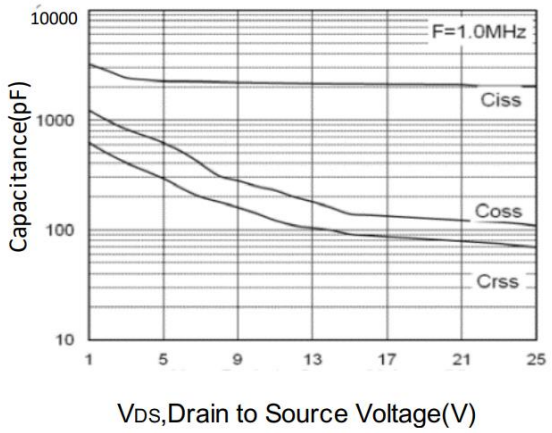

Figure 7. Capacitance Characteristics

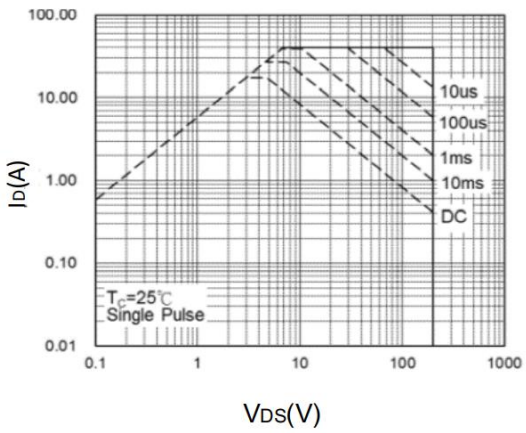

Figure 8. Safe Operating Area

Package Outline

Unit : mm

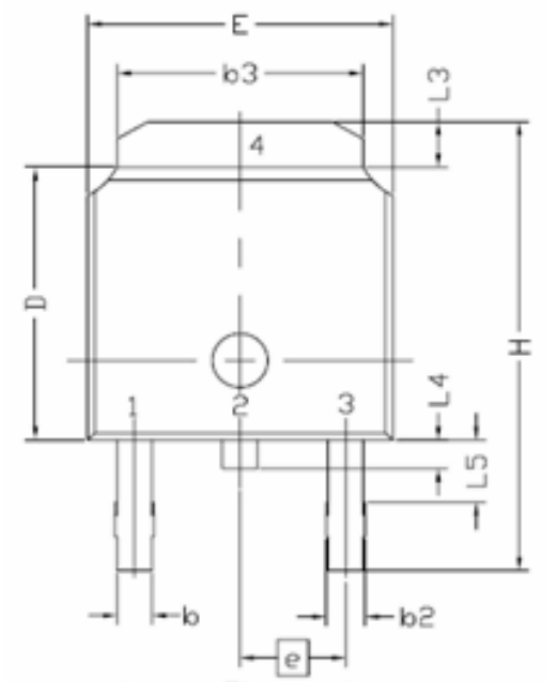

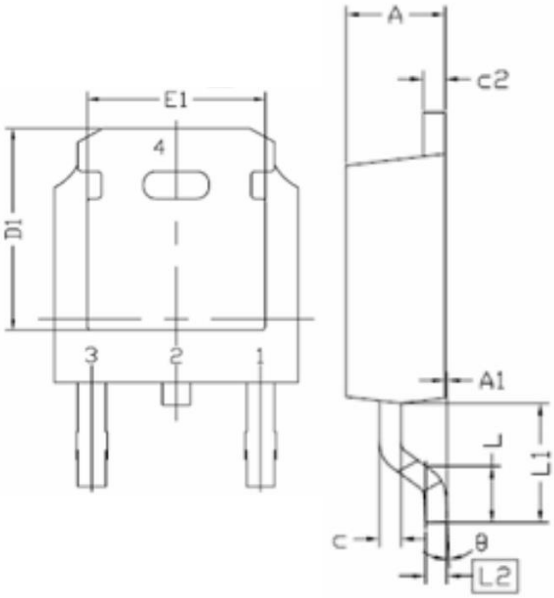

SYMBOL	DIMENSIONS			NOTES
	MIN	NOM	MAX	
E	6.34	6.54	6.74	
L	1.30	1.60	1.90	
L1	2.60	2.90	3.20	
L2	0.5 BSC			
L3	0.82	1.02	1.22	
L4	0.80	1.00	1.20	
L5	2.60	2.90	3.20	
D	5.80	6.10	6.40	
H	8.40	9.00	9.60	
b	1.42	1.52	1.62	
b2	2.35	2.55	2.75	
b3	5.20	5.30	5.40	
e	4.58 BSC			
A	2.08	2.28	2.48	
A1	0.00	0.15	-	
c	0.40	0.50	0.60	
c2	0.40	0.50	0.60	
D1	-	5.25	-	
E1	-	4.8	-	
θ	0.00°	10.00°		