PT7111X

A 2-Channel Linear Smart LED Driver with Low Flicker

PT7111X

A 2-Channel Linear Smart LED Driver with Low Flicker

1. General Description

The PT7111X is the low flicker AC direct driver IC with PowerCubeSemi's proprietary low flicker operation methods. The control IC provides all the features that required for a low flicker. The voltage rating of N-type LDMOS and JFET high voltage BCD process is 700V. PowerCubeSemi's patented driver topology for LEDs provides simple but robust solution and the TRIAC dimming as well as 0-10V dimming without additional control circuits.

Features

- Autonomous Dual Voltage Operation
- Very low flicker
- High Output Power Up to 25W
- Maximum 250mA Output Driving Current
- High power factor (> 0.90)
- Low THD (<25%)
- Low EMI due to a slope control
- TRIAC dimming Control
- 0-10V dimmer Compatible

Application

- General Purpose LED Lighting
- LED Signage and Displays
- Architectural and decorative LED lighting
- LED street lighting

Typical Application Circuit

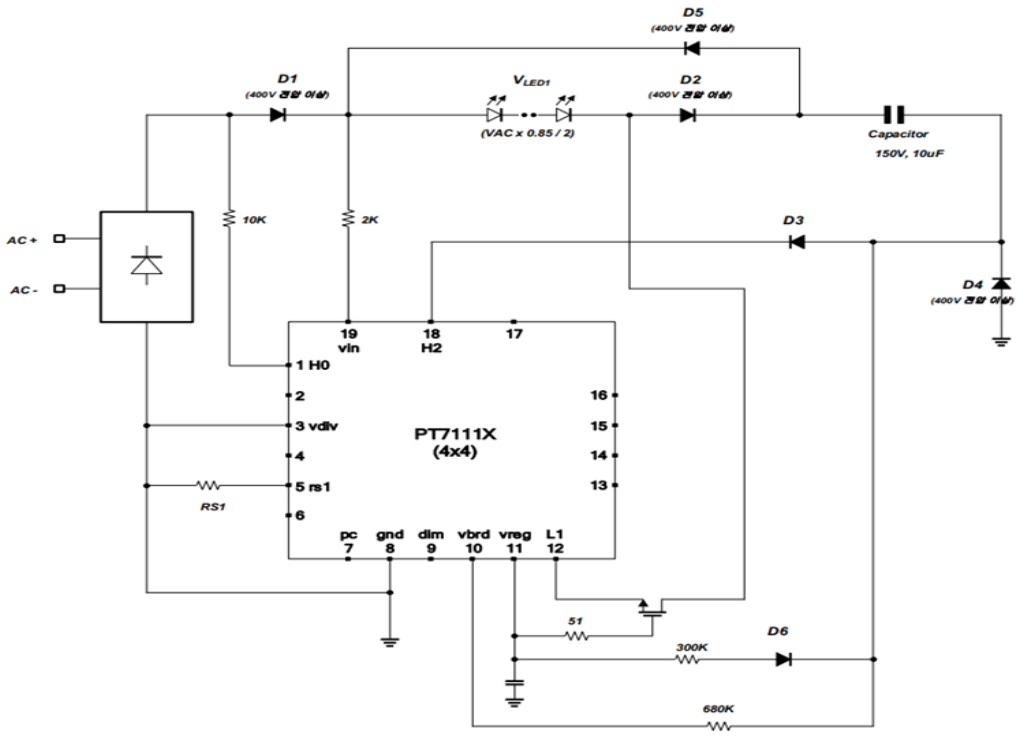

2. Block Diagram

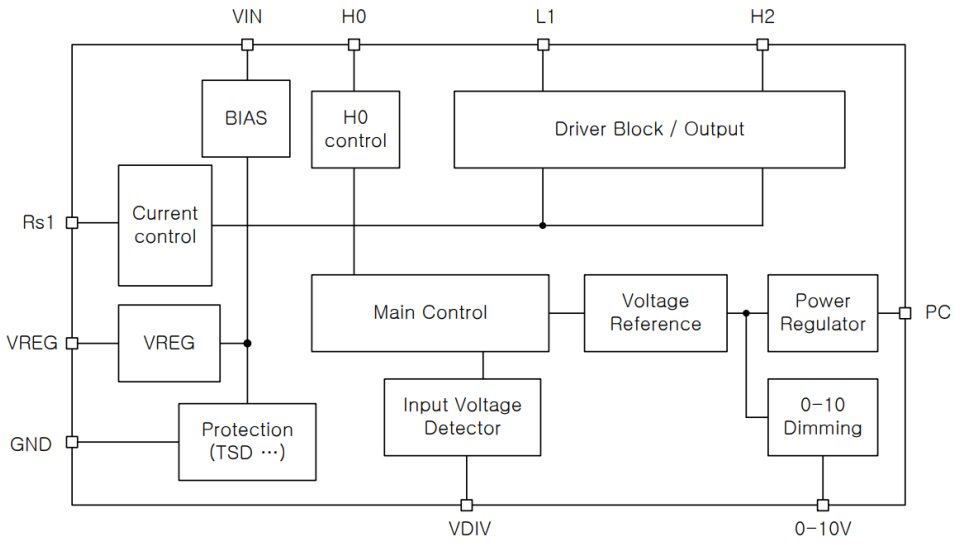

3. Pin Information

- **Pin Description**

1	H0	Bleeder Current
2	NC	No Connection
3	VDIV	Input Voltage Divider
4	NC	No Connection
5	RS1	Current Sensing Resistor
6	NC	No Connection
7	PC	Power Control
8	GND	Ground
9	DIM	0-10V dimming Control Input
10	VBRD	Bleeder Control
11	VREG	Voltage Output
12	L1	1st LED Input
13	NC	No Connection
14	NC	No Connection
15	NC	No Connection
16	NC	No Connection
17	NC	No Connection
18	H2	2nd LED Input
19	VIN	Input Voltage

6. Electrical Specification

V_{IN}=310V typical values are at T_A=+25℃, unless otherwise specified

Power Supply

Description	Symbol	Condition	Min	Typ	Max	Unit
Maximum Input Voltage	VIN, max		-	-	700	V
Input Current	IIN		-	370	1000	μA

Thermal Shut-Down

Description	Symbol	Condition	Min	Typ	Max	Unit
Thermal Shut-Down	TSD		-	145	-	℃

LED Sinking Current

Description	Symbol	Condition	Min	Typ	Max	Unit
LED0 Sinking Current (H0)	ILED0		-	-	50	mA
LED1 Sinking Current (L1)	ILED1	V_{L1}=10V, Rs1=20Ω	-	140	-	
LED2 Sinking Current (H2)	ILED2	V_{H2}=20V, Rs1=20Ω	-	140	-	

0-10V PIN

Description	Symbol	Condition	Min	Typ	Max	Unit
DIM Input Bias Current	IDIM		-	-120	-	μA
Dimmer Turn-off Voltage	Vdim, off		-	0.5	-	V
Maximum DIM Input Voltage	Vdim, max		-	10	-	V

6. Electrical Specification

V_{IN}=310V typical values are at T_A=+25℃, unless otherwise specified

DIV PIN

Description	Symbol	Condition	Min	Typ	Max	Unit
Maximum DIV Voltage	Vdiv_max		-	-	5.5	V
Input Current	I_{DIV}		-	-	2	μA

V_{REG} PIN

Description	Symbol	Condition	Min	Typ	Max	Unit
External Output Voltage	V_{REG}		-	12	13	V
Maximum Sourcing Current	I_{REG_MAX}		-	-	300	μA

PC PIN

Description	Symbol	Condition	Min	Typ	Max	Unit
Threshold Voltage	V_{TH}		-	0.6	-	V
Input Current	I_{PC}		-	15	-	μA

IDRV PIN

Description	Symbol	Condition	Min	Typ	Max	Unit
Maximum IDRV Voltage	V_{IDRV_max}		-	-	12	V

Operating Temperature

Description	Condition	Min	Typ	Max	Unit
Operating Temperature Range		-40	-	125	℃
Junction Temperature Range		-40	-	150	
Storage Temperature Range		-60	-	150	

Package Outline

TOP VIEW

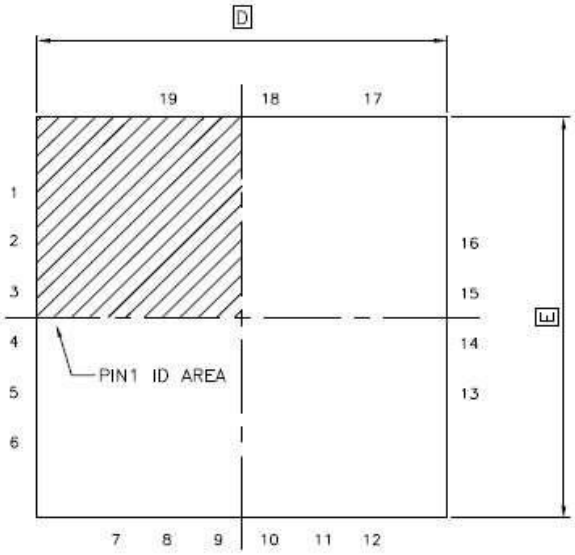

BOTTOM VIEW

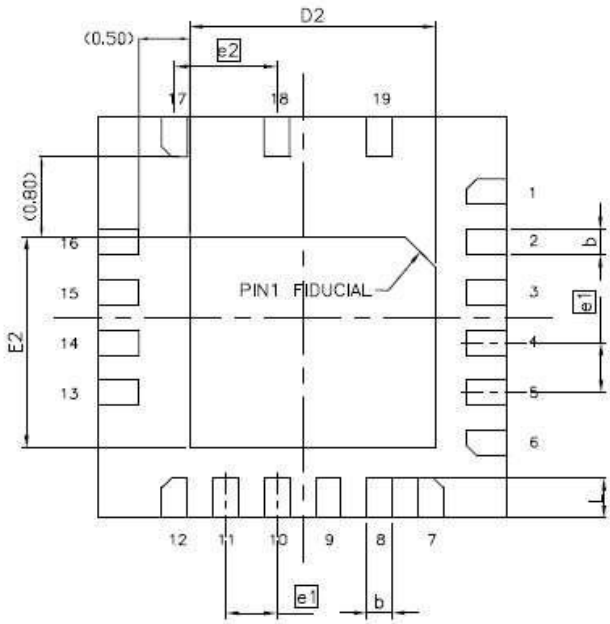

SIDE VIEW

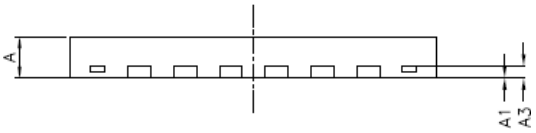

SYMBOL	DIMENSIONS			NOTES
	MIN	NOM	MAX	
A	0.70	0.75	0.80	
A1	0	0.02	0.05	
A3	0.203 REF			
b	0.20	0.25	0.30	
D	3.90	4.00	4.10	
E	3.90	4.00	4.10	
D2	2.35	2.40	2.45	
E2	2.05	2.10	2.15	
e1	0.50 BSC			
e2	1.00 BSC			
L	0.35	0.40	0.45	