PT7120X

A 4-Channel Linear Smart LED Driver

PT7120X

A 4-Channel Linear Smart LED Driver

1. General Description

The PT7120X is the autonomous free voltage driver IC with PowerCubeSemi's proprietary free voltage operation methods. The control IC provides all the features that required for a free voltage as well as single voltage operation. The voltage rating of N-type LDMOS and JFET high voltage BCD process is 700V.

PowerCubeSemi's patented driver topology for LEDs provides simple but robust solution and the Triac dimming as well as 0-10V dimming without additional control cirucuits.

Features

- Autonomous dual voltage operation
- High efficiency linear LED driver (up to 95%)
- High output power up to 20W
- Maximum 250mA output driving current
- High power factor (> 0.95)
- Low THD (< 15%)
- Only 1 external component for current setting
- Low EMI due to a slope control
- Triac dimming control
- 0-10V dimmer compatible

Application

- General purpose LED lighting
- LED signage and displays
- Architectural and decorative LED lighting
- LED street lighting

Typical Application Circuit

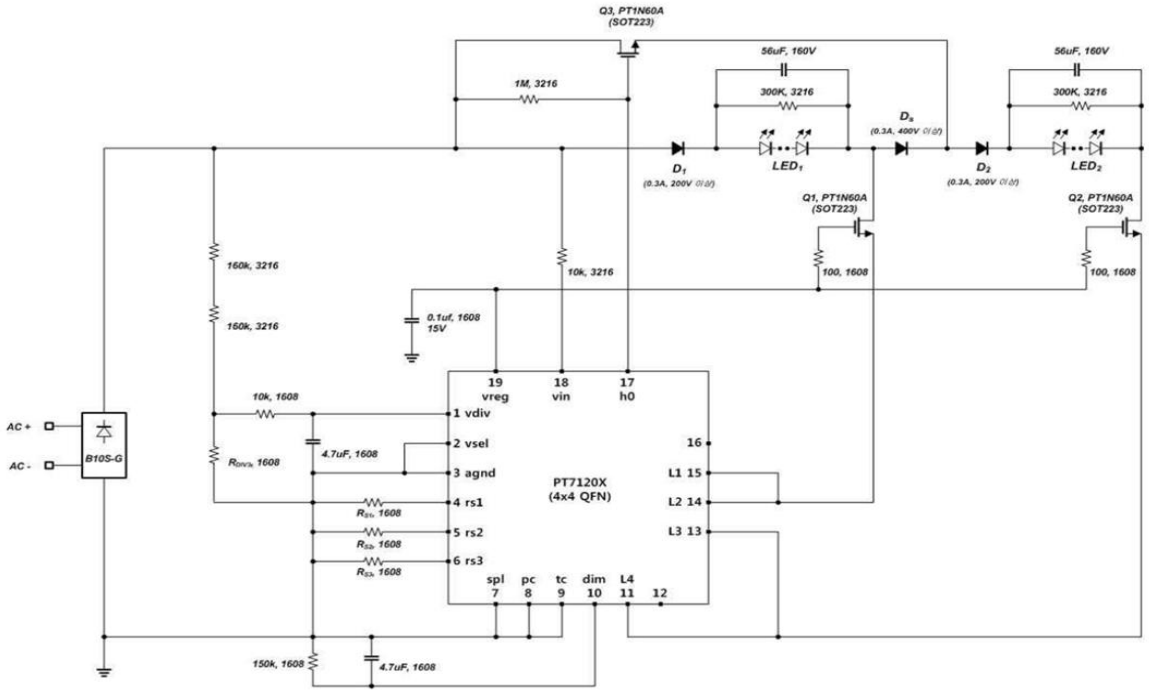

6. Electrical Specification

PT7120X, 4 channel - V_{IN}=310V, T_A=25℃

Power Supply

Description	Symbol	Condition	Min	Typ	Max	Unit
Maximum Input Voltage	VIN, max		-	-	600	V
Input Current	IIN		-	370	1000	μA

Thermal Shut-Down

Description	Symbol	Condition	Min	Typ	Max	Unit
Thermal Shut-Down	TSD		-	145	-	℃

LED Sinking Current 1 (Single Operation)

Description	Symbol	Condition	Min	Typ	Max	Unit
LED0 Sinking Current (H0)	ILED0	VLED0=20V, Rs2=20Ω	-	25	-	mA
LED1 Sinking Current	ILED1	VLED1=10V, Rs2=20Ω	-	50	-	
LED2 Sinking Current	ILED2	VLED2=10V, Rs2=20Ω	-	70	-	
LED3 Sinking Current	ILED3	VLED3=10V, Rs2=20Ω	-	95	-	
LED4 Sinking Current	ILED4	VLED4=10V, Rs2=20Ω	-	120	-	

LED Sinking Current 2 (Dual Operation, Low Voltage Region)

Description	Symbol	Condition	Min	Typ	Max	Unit
LED0 Sinking Current (H0)	ILED0	VLED0=20V	-	0	-	μA
LED1 Sinking Current	ILED1	VLED1=10V, Rs1=20Ω	-	55	-	mA
LED2 Sinking Current	ILED2	VLED2=10V, Rs1=20Ω	-	75	-	
LED3 Sinking Current	ILED3	VLED3=10V, Rs2=20Ω	-	55	-	
LED4 Sinking Current	ILED4	VLED4=10V, Rs2=20Ω	-	75	-	

LED Sinking Current 3 (Dual Operation, High Voltage Region)

Description	Symbol	Condition	Min	Typ	Max	Unit
LED0 Sinking Current (H0)	ILED0	VLED0=20V	-	250	-	μA
LED1 Sinking Current	ILED1	VLED1=10V, Rs3=20Ω	-	50	-	mA
LED2 Sinking Current	ILED2	VLED2=10V, Rs3=20Ω	-	70	-	
LED3 Sinking Current	ILED3	VLED3=10V, Rs3=20Ω	-	95	-	
LED4 Sinking Current	ILED4	VLED4=10V, Rs3=20Ω	-	120	-	

0-10V PIN

Description	Symbol	Condition	Min	Typ	Max	Unit
DIM Input Bias Current	IDIM		-	-120	-	μA
Dimmer Turn-off Voltage	Vdim, off		-	0.5	-	V
Maximum DIM Input Voltage	Vdim, max		-	10	-	

DIV PIN

Description	Symbol	Condition	Min	Typ	Max	Unit
High Threshold Voltage	Vth, high		-	2.6	-	V
Low Threshold Voltage	Vth, low		-	2.5	-	
Input Current	Idiv		-	-1.5	-	μA

Spl PIN

Description	Symbol	Condition	Min	Typ	Max	Unit
Threshold Voltage	Vth		-	0.6	-	V
Input Current	I_{SPL}		-	10	-	μA

V_{REG} PIN

Description	Symbol	Condition	Min	Typ	Max	Unit
External Output Voltage	V_{REG}		-	11.5	12.5	V
Maximum Sourcing Current	I_{REG_MAX}		-	-	300	μA

PC PIN

Description	Symbol	Condition	Min	Typ	Max	Unit
Threshold Voltage	VTH		-	0.6	-	V
Input Current	I_{PC}		-	15	-	μA

VSEL PIN

Description	Symbol	Condition	Min	Typ	Max	Unit
Threshold Voltage	VTH		-	0.6	-	V
Input Current	I_{PC}		-	10	-	μA

Operating Temperature

Description	Condition	Min	Typ	Max	Unit
Operating Temperature Range		-40	-	125	℃
Junction Temperature Range		-40	-	150	
Storage Temperature Range		-60	-	150	

2. Block Diagram

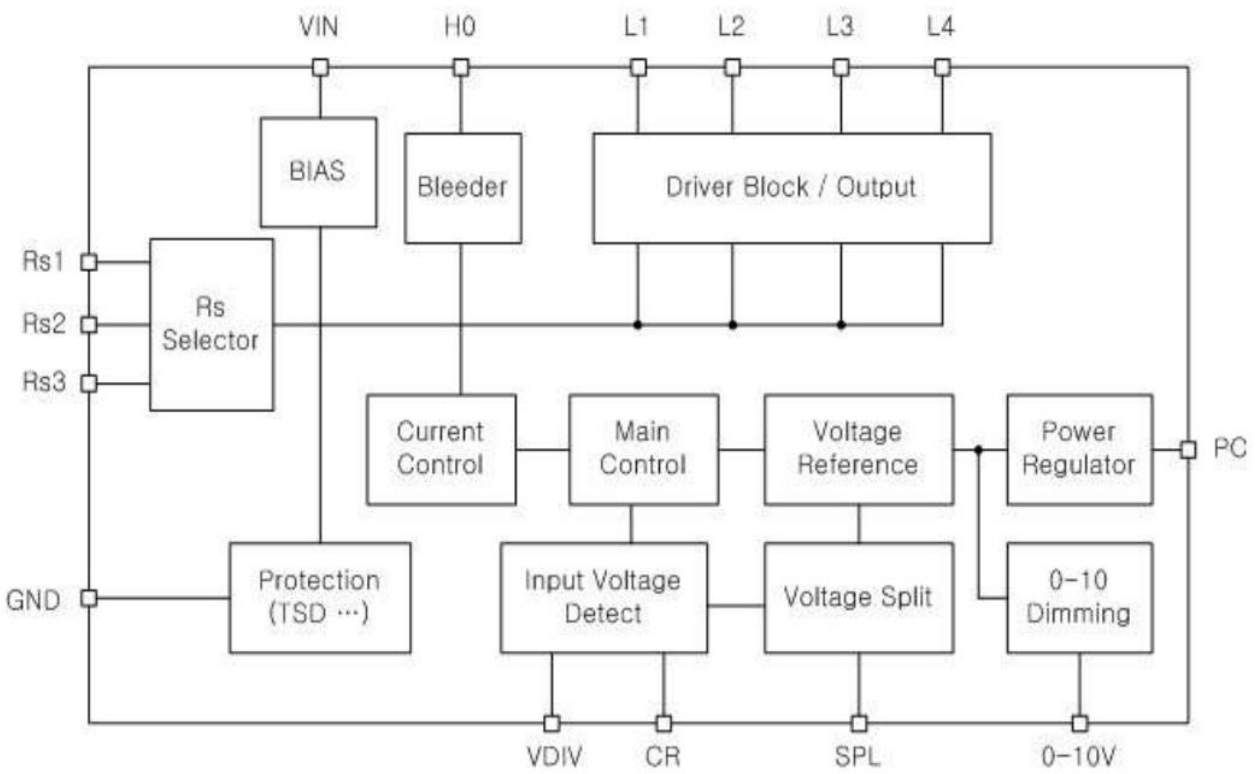

3. Pin Information

▪ Pin Description

Pin #	Pin Name	Description
1	VDIV	Input Voltage Divider
2	Vsel	Over Voltage Selection
3	GND	Ground
4	RS1	Current Sensing Resistor 1
5	RS2	Current Sensing Resistor 2
6	RS3	Current Sensing Resistor 3
7	SPL	Mode Selection (Voltage Split)
8	PC	Power Control Enable
9	Triac	Triac Input Control
10	DIM	0-10V Dimming Control Input
11	LED4	4th LED Input
12	NC	
13	LED3	3rd LED Input
14	LED2	2nd LED Input
15	LED1	1st LED Input
16	NC	
17	H0	Bleed or FET Control
18	VIN	Input Voltage
19	VREG	Voltage Output

Package Outline

TOP VIEW

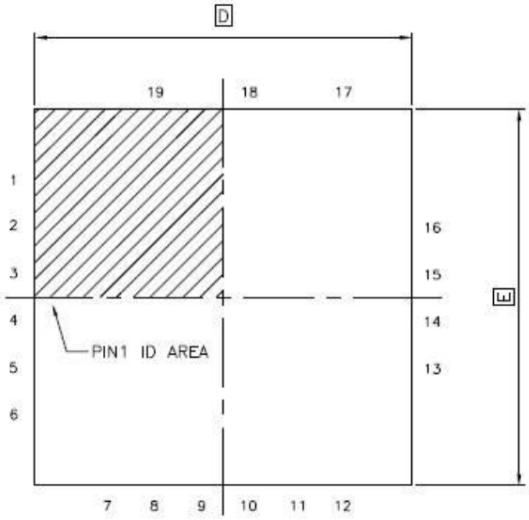

BOTTOM VIEW

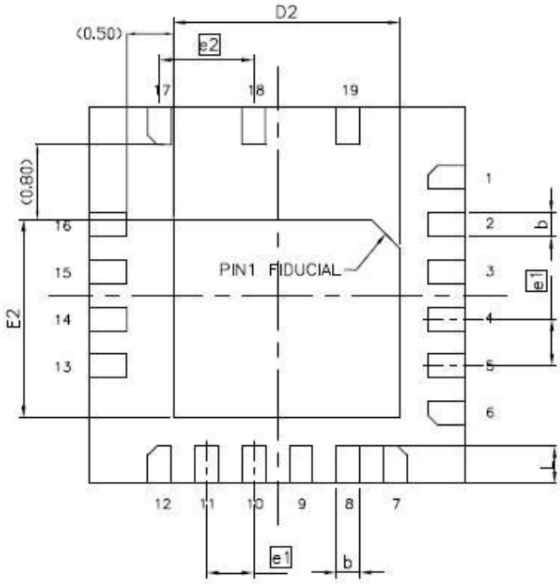

SIDE VIEW

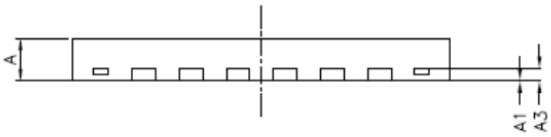

Unit : mm

SYMBOL	DIMENSIONS			NOTES
	MIN	NOM	MAX	
A	0.70	0.75	0.80	
A1	0	0.02	0.05	
A3	0.203 REF			
b	0.20	0.25	0.30	
D	3.90	4.00	4.10	
E	3.90	4.00	4.10	
D2	2.35	2.40	2.45	
E2	2.05	2.10	2.15	
e1	0.50 BSC			
e2	1.00 BSC			
L	0.35	0.40	0.45	